Explosion Drawing

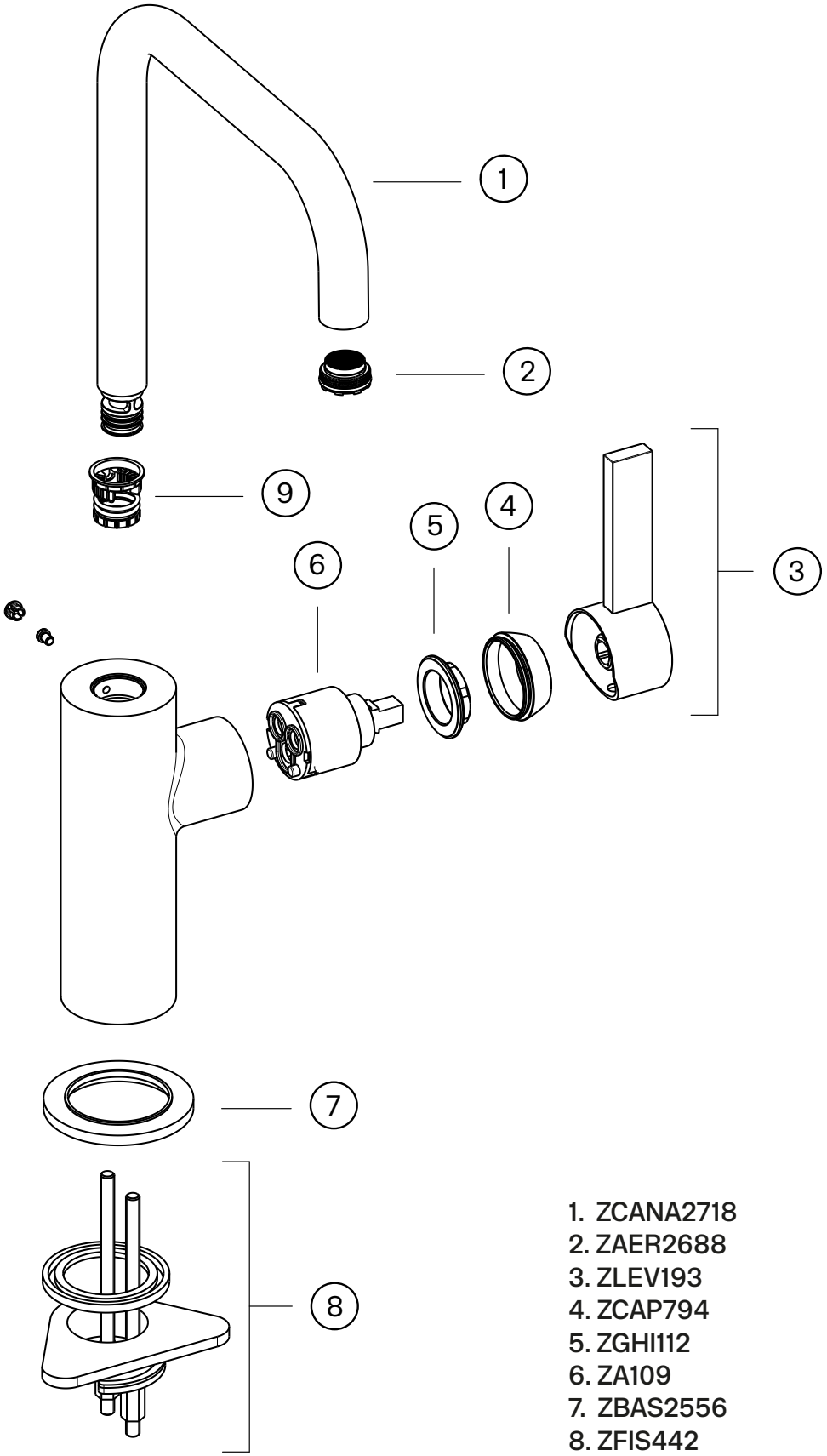

1. ZCANA2718
2. ZAER2688
3. ZLEV193
4. ZCAP794
5. ZGHI112
6. ZA109
7. ZBAS2556
8. ZFIS442
9. ”O-ringset ARM kök utan handdusch”
   O-ring set ARM kitchen without
   hand shower